BLUME'S®

KeyStone™ Stainless Steel Bowls

DOUBLE BOWL

BIG BOWL/LITTLE BOWL

K22132

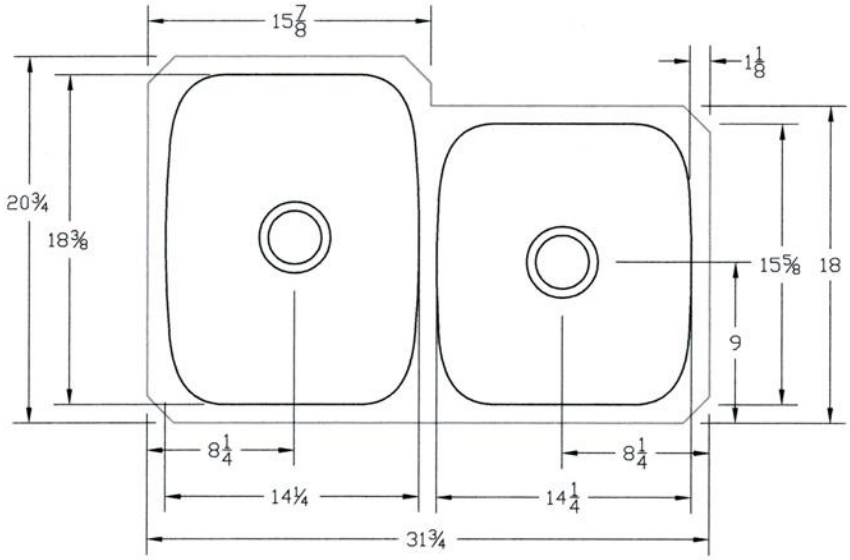

SINK SPECIFICATIONS
(Inches)*

OVERALL:

Length:	31 ¾"
Width:	20 ¾"

INSIDE LEFT BOWL:

Length:	14 ¼"
Width:	18 ⅜"
Depth:	8 5/16"

INSIDE RIGHT BOWL:

Length:	14 ¼"
Width:	15 ⅝"
Depth:	8 5/16"

18 GAUGE NICKEL BEARING STAINLESS STEEL

SATIN FINISH SURFACE

FULLY UNDERCOATED TO DAMPEN SOUND AND PREVENT CONDENSATION.

MOUNTS UNDER SOLID SURFACE, QUARTZ, OR GRANITE TOPS

DRAIN OPENING: 3 ¾"

Last Revised 9.22.09

www.blumes.net